# RF29CB9900QK

SAMSUNG

## Bespoke 4-Door Flex™ Refrigerator (29 cu. ft.) with Family Hub™+

## Signature Features

### Color Customization

Customize the design of your refrigerator with changeable door panels. Choose from a variety of colors and two finishes to create a space that fits your style.[1]

[1]Purchased only as a fixed color combination (Charcoal Glass/Stainless Steel). All panels except for Family Hub™ screen panel remain customizable with current Bespoke color offering.

### Family Hub™+

The Family Hub™+ refrigerator helps you connect to what's most important: your family and home. Family Hub™+ lets you see inside your smart refrigerator, manage calendars, stream music, see who's at the front door[2] and much more — all right from your fridge. With a huge 32" screen that's 2 x larger than current Family Hub models[3], you can enjoy an enhanced and richer user experience.

[2]Compatible door bell is sold separately.
[3]Compared to current Family Hub™ models

### Beverage Center™

Enjoy quick access to refreshingly cool, filtered water in two ways. Choose from an internal dispenser or a built-in AutoFill Water Pitcher that automatically refills, with the option to infuse with a flavor.

### Dual Ice Maker with Ice Bites™

Select from cubed ice or Ice Bites™ that chills your drink faster.[4]

[4]Compared to cubed ice

## Available Colors*

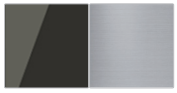

Charcoal Glass Top and Family Hub™+ Panels with Stainless Steel Bottom Panels

Beverage Center™

Dual Ice Maker with Ice Bites™

## Design

- Bespoke Design
- Beverage Center™
- Slide-In Shelf
- LED Lighting
- Gallon Door Bins

## Technology

- Family Hub™+
- Wi-Fi Enabled
- Power Cool & Power Freeze
- Door Alarm
- Water Filter Indicator
- Sabbath Mode

## Performance

- FlexZone™
- Dual Auto Ice Maker with Ice Bites™ and Cubed Ice
- Extra-Large Flexible Storage
- FlexCrisper
- Triple Cooling
- Metal Cooling

## Rating

ENERGY STAR® rated: 698 kWh/yr

SmartThings

# RF29CB9900QK

SAMSUNG

## Bespoke 4-Door Flex™ Refrigerator (29 cu. ft.) with Family Hub™+

## Installation Specifications

1. Measure the height, width and depth of the opening, making sure to include baseboards, molding tile, countertop overhang, etc. Check to be sure there is enough room to open the door (consider walls, islands or other obstacles when measuring).
2. Refer to illustration below to determine dimensions.
3. Allow 2.5" of clearance on hinge side of refrigerator when installing next to a wall where handle may make contact.
4. Allow 1" minimum clearance at rear for proper air circulation and water/electrical connections. Allow a 3/8" minimum clearance at sides and top for ease of installation.
5. Ensure each door and entryway in the home is wide enough for the refrigerator to be moved through easily.

For optimal usage and ability to open refrigerator doors completely, do not install next to a wall.

Please note: The following dimensions and cutout information is for planning purposes only. For complete installation details, consult manual packed with product or download manual online at samsung.com.

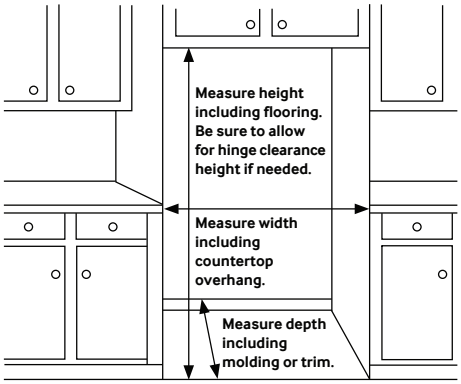


## Dimensions

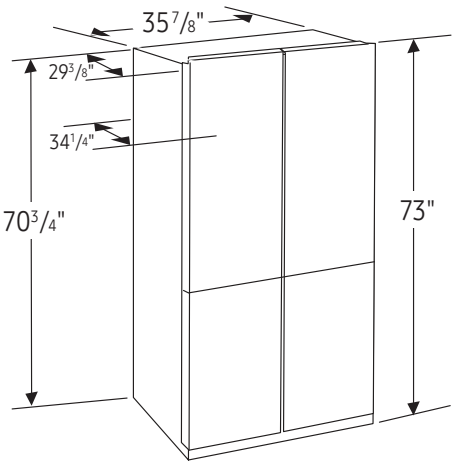


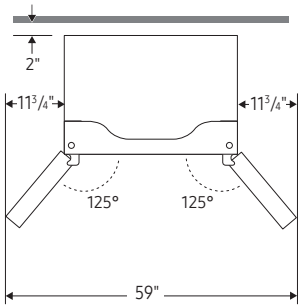


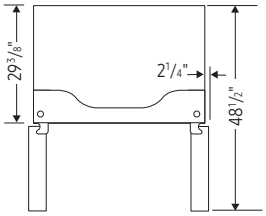


**Total Capacity: 28.6 cu. ft.**

**Refrigerator: 17 cu. ft.**
- 1 Slide-In Shelf, 3 Tempered Glass Spill-Proof Shelves
- 2 Clear Drawers: FlexCrisper and Crisper
- 6 Door Bins
  Right: 1 Gallon Bin, 2 Regular Bins
  Left: 1 Gallon Bin, 2 Regular Bins
- LED Lighting

**Freezer: 11.6 cu. ft.**
- Dual Ice Maker in Freezer (Cubed Ice or Ice Bites)
  2 Ice Buckets with Cover and 1 Scoop
- 4 Slide-Out Shelves
- 6 Door Bins
- Wine Rack
- LED Lighting

**Accessories**
Water Filter: HAF-QIN

**Warranty**
Two (2) Years Parts and Labor on Refrigerator*
Five (5) Years Parts and Labor on Sealed Refrigeration System Only**
Ten (10) Years Parts and Five (5) Years Labor on Digital Inverter Compressor

*Effective for purchases made between 10/1/22 - 9/30/23; proof of purchase required.
**Compressor, evaporator, condenser, drier and connecting tubing.

**Product Dimensions & Weight**
Dimensions (WxHxD with hinges and doors):
35 7/8" x 73" x 34 1/4"

Dimensions (WxHxD without hinges and door):
35 7/8" x 70 3/4" x 29 3/8"

Weight: 359.3 lbs

**Shipping Dimensions & Weight (WxHxD)**
Dimensions: 38 1/4" x 78 5/8" x 36 1/4"

Weight: 381.3 lbs

| Color | Model # | UPC Code |
|---|---|---|
| Charcoal Glass Top and Family Hub™+ Panels with Stainless Steel Bottom Panels | RF29CB9900QKAA | 887276750286 |

Actual color may vary. Design, specifications, and color availability are subject to change without notice. Non-metric weights and measurements are approximate.

©2023 Samsung Electronics America, Inc., 85 Challenger Road, Ridgefield Park, NJ 07660. Tel: 800-SAMSUNG. samsung.com. Samsung is a registered trademark of Samsung Electronics Co., Ltd.