WA56H9000AP

Samsung Top-Load Washer

5.6 cu. ft. Capacity DOE

5.6 cu. ft. Capacity

EZ Reach

Features

- EZ Reach
- Steam Cleaning
- AquaJet™ Deep Clean
- Smart Care
- EZ Drawer
- Swirl Interior Drum
- Self Clean
- 15 Preset Wash Cycles with 11 Options
- VRT® – Vibration Reduction Technology
- Internal Water Heater
- 1100 rpm Maximum Spin Speed
- Stainless Steel Pulsator
- Direct Drive Inverter Motor
- LED Display: Ice Blue
- Door Lid: Chrome Deco Curved Tinted Glass
- Sanitize Cycle

Convenience

- Child Lock
- Delay End – Up to 19 Hours
- 6 Temperature Settings
- 5 Spin Settings
- 5 Soil Settings
- Dispenser Trays: Main Wash, Softener, Bleach (Auto Tray)

ENERGY STAR® rated:
MEF = 2.9
WCF = 3.7
165 kWh/yr

*Ranked **"Highest in Customer Satisfaction with Clothes Washers"** by J.D. Power and Associates.*

Available Colors

Platinum (shown)

White

Signature Features

5.6 CU. FT. CAPACITY

- 3X the laundry, 1/3 of the time.*
- The world's largest washer.**
- Our biggest capacity lets you wash 4 laundry baskets in a single load.***

*Based on 3 standard loads of laundry (based on baskets) at 60 minutes each, total clean time is equal to 180 minutes which is equivalent to 1 load in the 9000.
**Based on USDOE/EPA listing. Residential Laundry Systems.
***Based on an 8-lb. load of laundry.

EZ REACH

- Largest loads, easy to reach.*
- An extra shallow, wider tub that's effortless to unload.

*Our biggest capacity lets you wash 4 laundry baskets in a single load. Based on an 8-lb. load of laundry.

STEAM WASHER

- Powerful steam removes stains.
- Virtually no pre-treatment needed.

SAMSUNG

WA56H9000AP

Samsung Top-Load Washer

Installing Your Washer

Alcove or closet installation

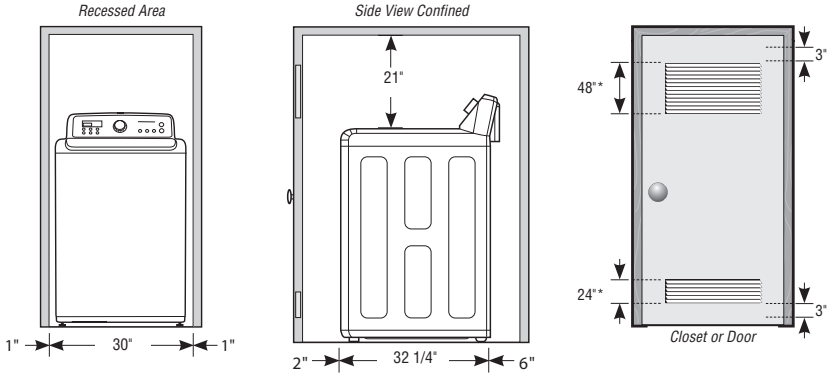

Minimum clearances for closets and alcoves:

Sides – 1"
Top – 21"
Rear – 6"
Closet front – 2"

If the washer and dryer are installed together, the closet front must have at least a 72 in (465 cm) unobstructed air opening. Your washer alone does not require a specific air opening.

* Required spacing. (External exhaust elbow requires additional space)

Dimensions

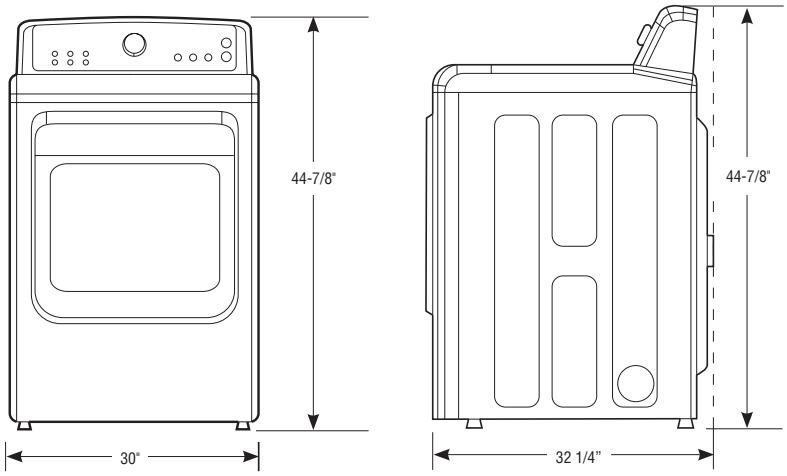

5.6 cu. ft. Capacity DOE

15 Preset Wash Cycles:

Normal, Niagara Wash, Water Proof, Deep Steam, Heavy Duty, Permanent Press, Sanitize, Allergen, Bedding, Colors/Darks, Active Wear, Delicates/ Hand Wash, Quick Wash, Rinse and Spin, Spin Only

11 Options:

AquaJet™ Deep Clean, Self Clean, Delay End – Up to 19 Hours, My Cycle, Pre Soak, Extra Rinse, Sound On/Off, Child Lock, Softener, Smart Care, Eco Plus

6 Temperature Settings:

Extra Hot, Hot, Warm, Eco Warm, Cold, Tap Cold

5 Spin Settings:

Extra High, High, Medium, Low, No Spin

5 Soil Settings:

Heavy, Heavy Medium, Normal, Low Medium, Light

2 Signal Level Settings:

On/Off

Warranty

One (1) Year Parts and Labor
Two (2) Years Control Board
Three (3) Years Stainless Steel Drum
Ten (10) Years Direct Drive Motor

Product Dimensions & Weight (WxHxD)

Dimensions: 30" x 44 7/8" x 32 1/4"
Weight: 174 lbs

Shipping Dimensions & Weight (WxHxD)

Dimensions: 31 7/8" x 47 1/4" x 33 1/2"
Weight: 187 lbs

Color	Model #	UPC Code
Platinum	WA56H9000AP	887276194851
White	WA56H9000AW	887276194868

Matching Dryer (Electric/Gas)

Platinum	DV56H9000EP	887276963457
White	DV56H9000EW	887276963471
Platinum	DV56H9000GP	887276963488
White	DV56H9000GW	887276963495

SAMSUNG

Actual color may vary. Design, specifications, and color availability are subject to change without notice. Non-metric weights and measurements are approximate.

Samsung received the highest numerical score for clothes washers in the proprietary J.D. Power 2009–2013 Laundry Appliance Studies.SM 2013 study based on 7,850 total responses measuring 12 clothes washer brands and measures opinions of consumers about their new washer purchased in the past 24 months. Proprietary study results are based on experiences and perceptions of consumers studied in January–February 2013. Your experiences may vary. Visit jdpower.com.

©2014 Samsung Electronics America, Inc. 85 Challenger Road, Ridgefield Park, NJ 07660. Tel: 800-SAMSUNG. samsung.com. Samsung is a registered trademark of Samsung Electronics Co. Ltd.