WV60M9900AV

SAMSUNG

Samsung FlexWash™ Washer

5.0 + 1.0 cu. ft. Total Capacity DOE

Signature Features

FlexWash™

- Two washers in one lets you wash separate loads at the same time.

6.0 cu. ft. Total Capacity

- 5.0 + 1.0 cu. ft. upper and lower washers mean fewer washes, less time in the laundry room.

Super Speed (Lower Washer)

- Wash a full load in as little as 30 minutes – 45% faster.*

* Normal 59-minute wash can now be completed in as little as up to 30 minutes as compared to WF42H5200 washer without Super Speed. Based on DOE standard's average of 7.5 loads per week.

Available Colors

Black Stainless Steel (shown)

White

FlexWash™

5.0 cu. ft. + 1.0 cu. ft. Capacity

Lower Wash Features

- Super Speed
- Steam Wash
- Wi-Fi Connectivity
- PowerFoam™
- VRT Plus™ Technology
- Self Clean+
- Smart Care
- Swirl Drum Design
- Touch Controls
- 1300 RPM Maximum Spin Speed
- Direct Drive Motor

Convenience

- Child Lock
- Door Lock
- Drum Light
- Dispenser Trays: Main Wash, Softener, Bleach

Upper Wash Features

- VRT™– Vibration Reduction Technology
- Wi-Fi Connectivity
- Self Clean
- Smart Care
- 800 RPM Maximum Spin Speed
- Stainless Steel Tub
- Direct Drive Motor
- Touch Controls

Convenience

- Child Lock
- Door Lock
- Dispenser Trays: Softener, Bleach
- Aqua Pebble Detergent Pod

WV60M9900AV

SAMSUNG

Samsung FlexWash™ Washer

5.0 + 1.0 cu. ft. Total Capacity DOE

Installation Specifications

If the washer and dryer are installed together or the dryer alone, the closet front must have two unobstructed air openings for a combined minimum total area of 72-inch.[2] Your washer alone does not require a specific air opening.

Alcove or closet installation

Minimum Clearance for Closet and Alcove Installations:

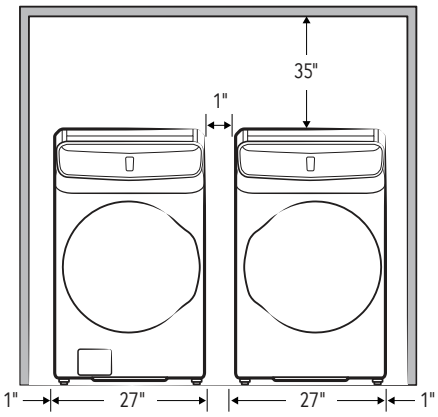

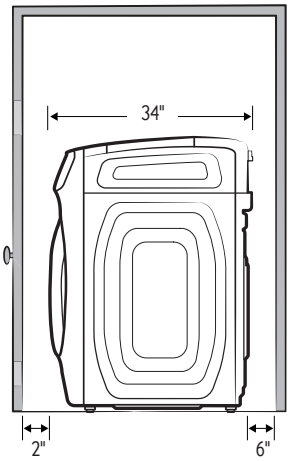

Installation with pedestal

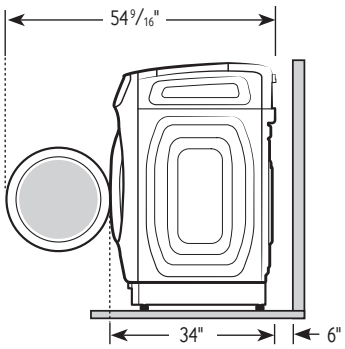

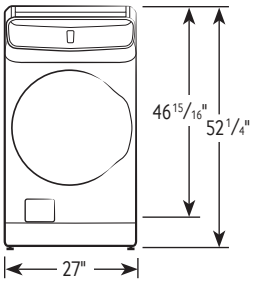

Dimensions

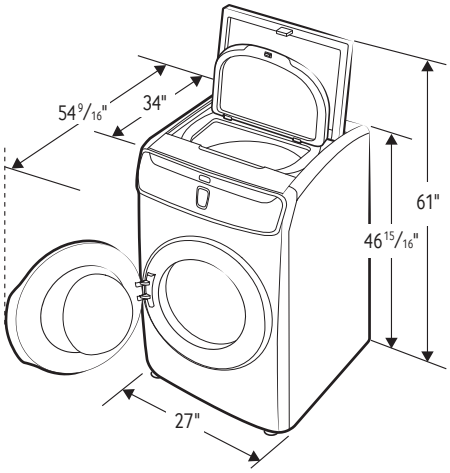

5.0 cu. ft. Capacity Lower Washer

12 Preset Wash Cycles:
Eco Cold, Normal, Heavy Duty, Permanent Press, Sanitize, Towels, Bedding, Whites, Active Wear, Delicates, Quick Wash, Rinse + Spin

11 Options:
Super Speed, Steam, Self Clean+, Delay End, Pre Soak, Spin Only, Smart Control, Smart Care, Drum Light, Child Lock, Sound

5 Temperature Settings:
Extra Hot, Hot, Warm, Cool, Cold

5 Spin Settings:
Extra High, High, Medium, Low, No Spin

5 Soil Settings:
Extra Heavy, Heavy, Normal, Light, Extra Light

Dispenser Trays: Main Wash, Softener, Bleach

1.0 cu. ft. Capacity Upper Washer

5 Preset Wash Cycles:
Normal, Active Wear, Delicates, Rinse + Spin, Spin Only

7 Options:
Cold/Warm Water Temp, Extra Rinse, Self Clean, Smart Control, Sound, Child Lock, Smart Care

Dispenser Trays: Softener, Bleach

Warranty
One (1) Year Parts and Labor
Three (3) Years Stainless Steel Drum (Part Only)
Ten (10) Years Direct Drive Motor (Part Only)

Product Dimensions & Weight (WxHxD)
Dimensions: 27" x 46 15/16" x 34"
Weight: 308 lbs

Shipping Dimensions & Weight (WxHxD)
Dimensions: 29 9/16" x 52" x 36 1/4"
Weight: 319 lbs

Color	Model #	UPC Code
Black Stainless Steel	WV60M9900AV	887276196947
White	WV60M9900AW	887276196954

Matching Dryer (Electric/Gas)

Black Stainless Steel	DVE60M9900V	887276197562
White	DVE60M9900W	887276197586
Black Stainless Steel	DVG60M9900V	887276197616
White	DVG60M9900W	887276197623

Actual color may vary. Design, specifications, and color availability are subject to change without notice. Non-metric weights and measurements are approximate.

©2017 Samsung Electronics America, Inc. 85 Challenger Road, Ridgefield Park, NJ 07660. Tel: 800-SAMSUNG. samsung.com. Samsung is a registered trademark of Samsung Electronics Co., Ltd.