DW80M9960

SAMSUNG

Samsung WaterWall™ Dishwasher

Signature Features

WaterWall™ Linear Wash System

- A powerful, streaming wall of water delivers remarkable cleaning results. Maintains maximum pressure from corner to corner.

AutoRelease™ Door

- At the end of a cycle, the door automatically pops open to circulate air and accelerate drying time.

Zone Booster™

- Target different zones of your dishwasher with custom settings.

Available Colors

Stainless Steel (shown)

Black Stainless Steel

WaterWall™ Linear Wash System

Zone Booster

Features

- Third Rack with FlexTray™
- Quiet Operation: 38 dBA
- Wi-Fi Connectivity
- 7 Wash Cycles
- 8 Options
- ENERGY STAR® rated: 239 kWh/Year
- Express Cycle: 60 Minutes
- One-Touch Adjustable Racking System
- 15 Place Settings
- Digital Leak Sensor
- Indicator Light

Convenience

- Child Lock
- Delay Start

DW80M9960

SAMSUNG

Samsung WaterWall™ Dishwasher

Installation Specifications

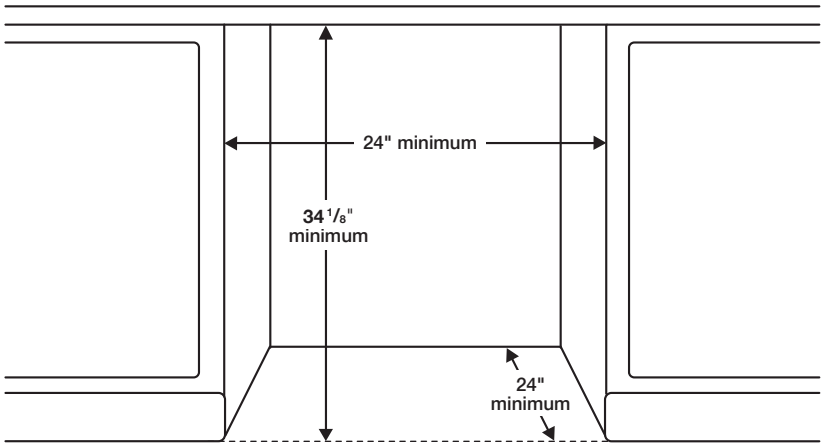

Dimensions

Side View

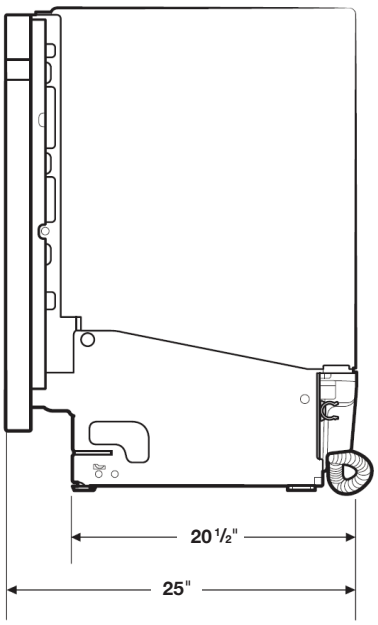

Rear View

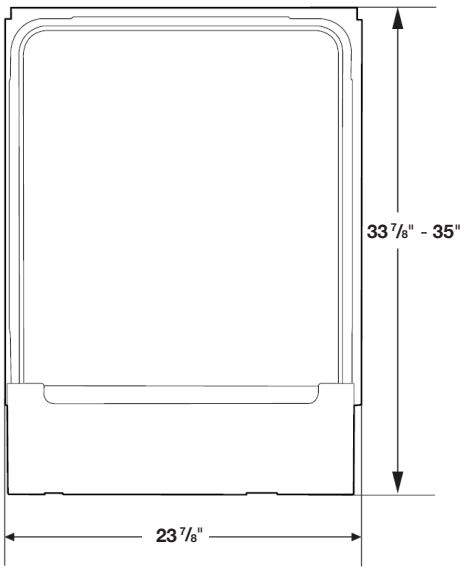

Features

- 7 Wash Cycles: Auto, Normal, Heavy, Delicate, Express 60, Rinse Only, Self Clean
- 8 Options: Half-Load Wash (Lower Rack), Zone Booster (Left), Speed Booster, Hi-Temp Wash, Sanitize (Anti-bacterial – NSF), Delay Start, Control Lock, Smart Control (Wi-Fi App)
- AutoRelease™ Door
- Hidden Heat Element
- Stainless Steel Interior Tub

Convenience

- Child Lock
- Digital Water Leakage Sensor
- Third Rack with FlexTray™
- One-Touch Adjustable Racking System
- Silverware Basket
- Upper Rack: 2 Cup Shelves, 2 Adjustable Tines
- Lower Rack: Fold-Down Tines

Warranty

One (1) Year All Parts and Labor

Five (5) Year Limited on Printed Circuit Board and Interior Nylon Racks

Lifetime Limited Warranty on Stainless Steel Door Liner and Tub for Leakage

Product Dimensions & Weight (WxHxD)

Dimensions:
23 7/8" x 33 7/8" x 25"

Weight: 95 lbs.

Shipping Dimensions & Weight (WxHxD)

Dimensions:
26" x 34 3/4" x 29 3/4"

Weight: 101 lbs.

Color	Model #	UPC Code
Stainless Steel	DW80M9960US	887276194172
Black Stainless Steel	DW80M9960UG	887276197838

Actual color may vary. Design, specifications, and color availability are subject to change without notice. Non-metric weights and measurements are approximate.

©2017 Samsung Electronics America, Inc. 85 Challenger Road, Ridgefield Park, NJ 07660. Tel: 800-SAMSUNG. samsung.com. Samsung is a registered trademark of Samsung Electronics Co., Ltd.