CHEF COLLECTION

SAMSUNG

36" Gas Cooktop

NA36M9750

Available Colors

Matte Black Stainless Steel (shown)
Stainless Steel

Sleek, smooth beveled front control design with edge to edge matte finish cast iron grates.

22K Dual Power burner provides two independent heating burners offering intense heat and precise control to quickly boil water or slowly melt chocolate without scorching.

Bluetooth connectivity automatically starts the hood* when the cooktop turns on.

*With compatible Samsung ventilation hood

22K Dual Power Burner

Bluetooth Connectivity

Features

- Cast Iron Griddle
- Wok Grate
- Easy-to-reach, Front Linear Controls
- Powerful Cooktop with 5 Burners
  - Right Front: 13K BTU
  - Left Front: 9.5K BTU
  - Right Rear: 5K BTU
  - Left Rear: 9.5K BTU
  - Center: 22K BTU (Dual Brass)
- Cast Iron 3-Piece Grates
- Cooktop On/Off Monitoring
- Sealed Burners
- LP Conversion Kit
- Can be installed over a single oven

CHEF COLLECTION

SAMSUNG

36" Gas Cooktop

NA36M9750

Cut-Out Dimensions of Countertop

All horizontal clearances must be maintained for a minimum of 18" above the cooking surface.

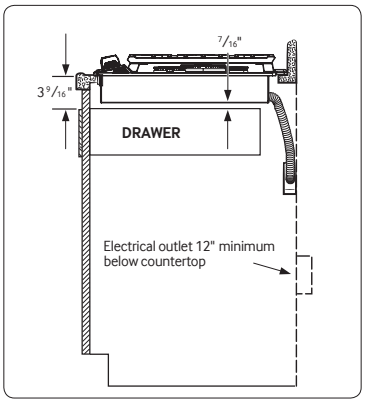

Allow 7/16" minimum vertical clearance from the cooktop bottom (or 3 9/16") minimum depth from the countertop) to any combustible surfaces, including the upper edge of a drawer installed below the cooktop.

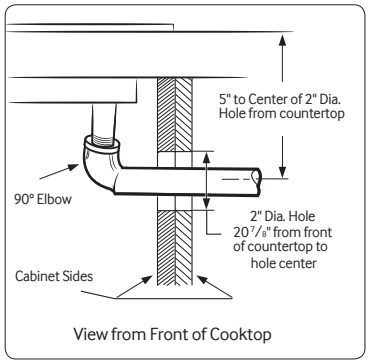

See built-in oven manual for complete installation instructions.

Maintain the following minimum clearance dimensions.

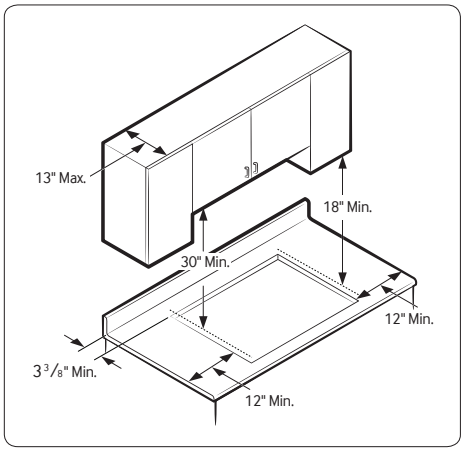

Total Power (BTU)
59K

Power Source
120V / 60 Hz / 1A

Gas Cooktop (BTU)
- Right Front: 13K
- Left Front: 9.5K
- Right Rear: 5K Simmer
- Left Rear: 9.5K
- Center: 22K (Dual Brass)

Warranty
One (1) Year All Parts and Labor

Product Dimensions & Weight (WxHxD)
Outside (Max) Cooktop Dimensions:
36" x 5 41/72" x 22 1/3"

Cooktop Cut-Out Dimensions:
33 7/8" x 3 1/8" x 19 1/8"

Weight: 84.7 lbs.

Shipping Dimensions & Weight (WxHxD)
Dimensions: 40 9/16" x 10 5/8" x 25 5/8"
Weight: 95.9 lbs.

Color	Model #	UPC Code
Stainless Steel	NA36M9750TS	887276238357
Matte Black Stainless Steel	NA36M9750TM	887276238340

Cooktop Dimensions

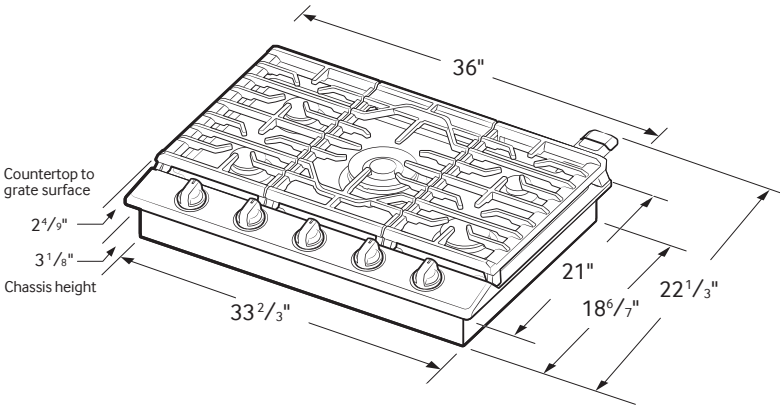

Installing Your Cooktop

Can be installed over a single oven.

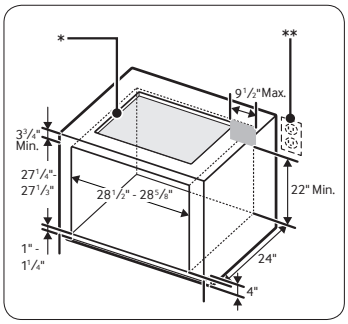

* See built-in oven installation for complete installation instructions. See label on top of approved built-in oven models.

** Refer to installation manual of oven.

Actual color may vary. Design, specifications, and color availability are subject to change without notice. Non-metric weights and measurements are approximate.

©2017 Samsung Electronics America, Inc. 85 Challenger Road, Ridgefield Park, NJ 07660. Tel: 800-SAMSUNG. samsung.com. Samsung is a registered trademark of Samsung Electronics Co., Ltd.