NX58M6850SS

SAMSUNG

Samsung Flex Duo™ Freestanding Gas Range

5.8 cu. ft. Capacity

Signature Features

Flex Duo™ with Dual Door

- Cook two dishes at different temperatures simultaneously with the Smart Divider.

Dual Fan Convection

- Two fans circulate air for faster, more even, and efficient cooking.

Powerful Flexible Cooktop

- Flexible Cooktop cooks, faster with 5 specialized round burners and 16K BTU and 15K BTU Power Burners.

Available Colors

Stainless Steel (shown)

Black Stainless Steel

Flex Duo™ Oven

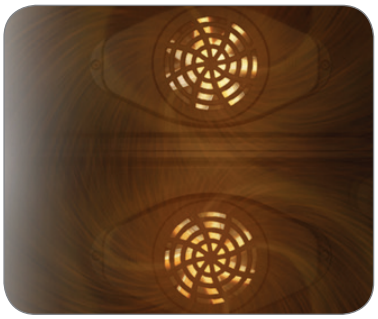

Dual Fan Convection

Features

- Large Oven Capacity – 5.8 cu. ft.
  - 3.4 cu. ft. upper
  - 2.3 cu. ft. lower
- 5K Simmer Burner
- Soft Close Door
- Wi-Fi Connectivity
- Wide View Window
- Three Preset Easy Cook Options
- Storage Drawer

Convenience

- Auto Oven Light
- Proofing
- Sabbath Mode
- Kitchen Timer
- Delay Start
- Child Safety Lock
- Self Clean
- Favorite Cook (Wi-Fi App)
- 3 Chrome Racks

NX58M6850SS

SAMSUNG

Samsung Flex Duo™ Freestanding Gas Range

5.8 cu. ft. Capacity

Installation Specifications

*30" minimum clearance between the top of the cooking surface and the bottom of an unprotected wood or metal cabinet; or 24" minimum when the bottom of the wood or metal cabinet is protected by not less than 1/4" flame-retardant millboard covered with not less than no. 28 MSG sheet steel, 0.015" stainless steel, 0.024" aluminum or 0.020" copper.

**15" minimum between the countertop and the adjacent cabinet bottom.

IMPORTANT: To eliminate the risk of burns or fire caused by reaching over heated surface units, cabinet storage space located above the surface units should be avoided. If cabinet storage is to be provided, the risk can be reduced by installing a range hood that projects horizontally a minimum of 5" beyond the bottom of the cabinets.

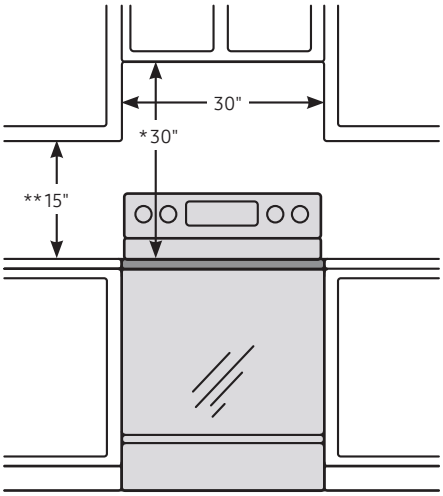

A: Required Cabinet Opening is 30"
B: Acceptable Electrical Outlet Space

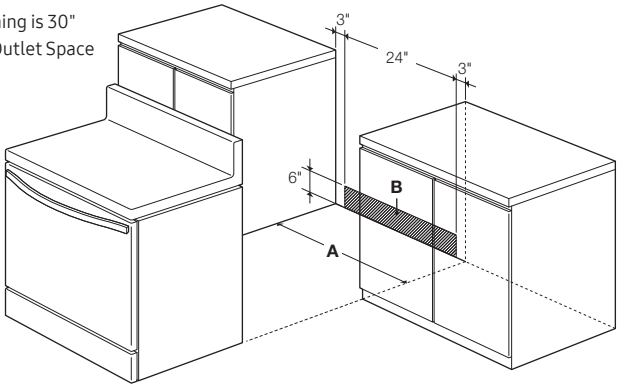

Dimensions

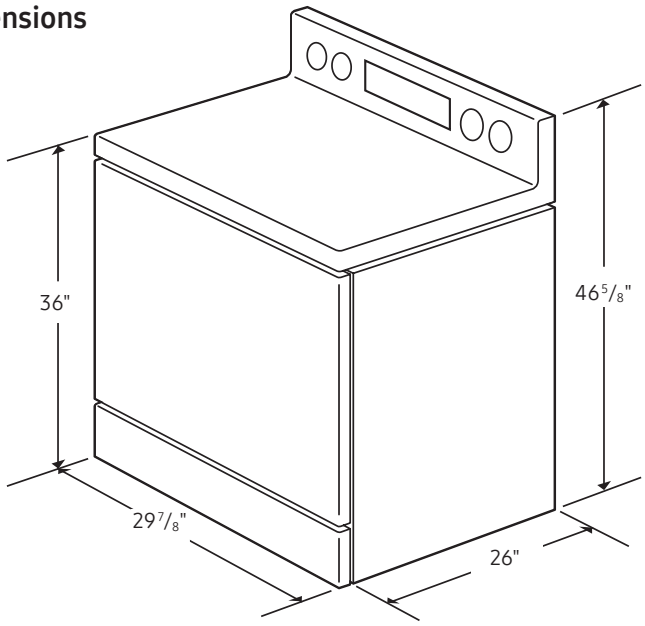

Total Power
55K BTU

Power Source
120V/60Hz

Stainless Steel Five-Burner Cooktop
- Right Front:16K BTU
- Left Front: 15K BTU
- Right Rear: 5K BTU
- Left Rear: 9.5K BTU
- Center (Oval): 9.5K BTU

Oven: 5.8 cu. ft. Capacity
- Upper Capacity: 3.4 cu. ft.
- Lower Capacity: 2.3 cu. ft.
- Fan Convection
- Bake: 175°F–550°F
- Variable Broil: Low/High (390°F - 465°F)
- Convection Bake: 175°F–550°F
- Convection Roast: 175°F–550°F
- Sabbath Mode

Storage Drawer
Capacity: 0.7 cu. ft.

Warranty
One (1) Year All Parts and Labor
Five (5) Years Electric Cooktop

Product Dimensions & Weight (WxHxD)
Actual Oven Dimensions:
25" x 19" x 21 1/4"

Outside Net Dimensions:
29 7/8" x 46 5/8" x 26"

Weight: 232 lbs.

Shipping Dimensions & Weight (WxHxD)
Dimensions:
33 1/16" x 50 5/8" x 30 5/16"

Weight: 254 lbs.

Color	Model #	UPC Code
Stainless Steel	NX58M6850SS	887276199252
Black Stainless Steel	NX58M6850SG	887276199245

Actual color may vary. Design, specifications, and color availability are subject to change without notice. Non-metric weights and measurements are approximate.

©2017 Samsung Electronics America, Inc. 85 Challenger Road, Ridgefield Park, NJ 07660. Tel: 800-SAMSUNG. samsung.com. Samsung is a registered trademark of Samsung Electronics Co., Ltd.