NX60T8511SS

SAMSUNG

Samsung Front Control Slide-in Gas Range with Air Fry

6.0 cu. ft. Capacity

Signature Features

Air Fry

- Cooking just got healthier* with new Air Fry mode. Using little to no oil, you can quickly prepare your favorite fried foods right in your oven. Air Fry tray included.

*As compared to deep frying.

Convection

- Powerful convection saves you time by cooking food fast and more evenly. Perfect for baking and roasting.

Fingerprint Resistant Finish

- Fingerprint-resistant smudge-free finish for an everyday beautiful appearance.

Available Colors

- Fingerprint Resistant Stainless Steel (shown)
- Fingerprint Resistant Black Stainless Steel
- Fingerprint Resistant Tuscan Stainless Steel

Air Fry

Convection

Features

- Air Fry, Tray Included
- Convection
- Fingerprint Resistant Finish
- 18K BTU Dual Ring Brass Power Burner
- Aluminum Griddle
- Large Oven Capacity – 6.0 cu. ft.
- Glass Touch Controls
- Ready2Fit™ Guarantee
- Edge-to-Edge Grates
- Storage Drawer
- Flexible Cooktop:
  Five Burner Cooktop
  - Right Front: 18K BTU
  - Left Front: 16K BTU
  - Right Rear: 5K BTU
  - Left Rear: 9.5K BTU
  - Center (Oval): 10K BTU

Convenience

- Wi-Fi Connectivity
- Voice-Enabled
- Convection Auto Conversion
- Self Clean
- Child Safety Lock
- Delay Start
- Auto Oven Light
- Kitchen Timer
- Sabbath Mode

Wi Fi Bixby works with Google Assistant Ready2Fit™

NX60T8511SS

SAMSUNG

Samsung Front Control Slide-in Gas Range with Air Fry

6.0 cu. ft. Capacity

Installing Your Range

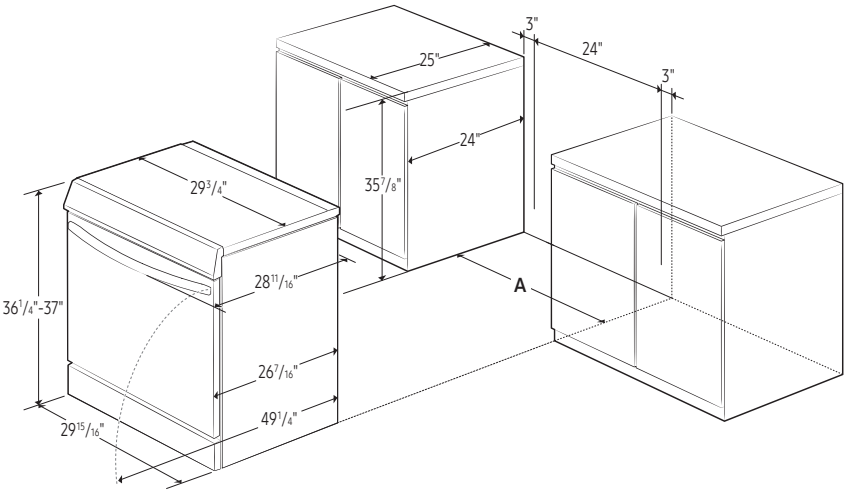

A: Cabinet opening 30"

IMPORTANT: If your cabinets are over 37" high, you must install this range on a hard, heat-resistant support that raises the surface of the range so that it is about even with the countertop.

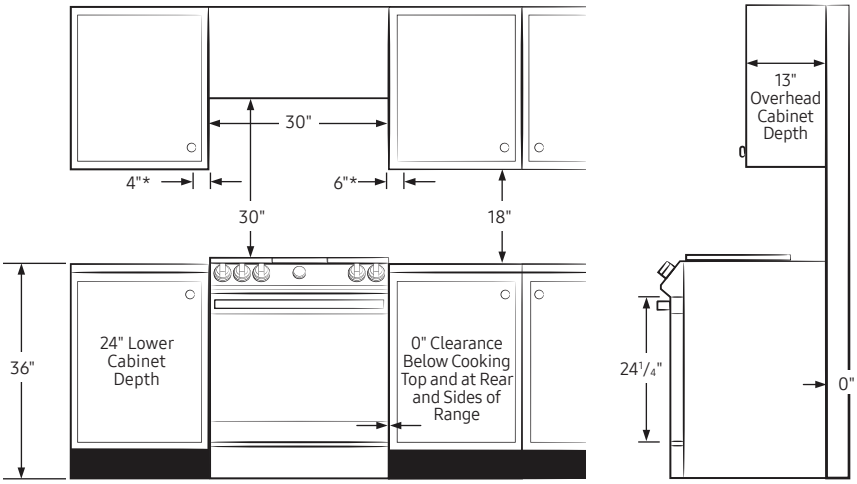

*Side clearance above cooking surface to any objects, i.e., wall.

IMPORTANT: Consult with Installation Manual for detailed instructions before installing.
All ranges must be installed with the Anti-Tip device that is included.

Recommended Locations for Gas Piping and Electrical Outlets

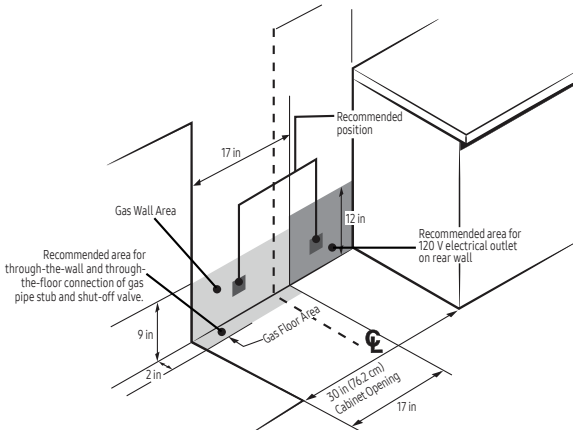

Total Power (BTU)
58,500 BTU

Power Source
120V/60Hz/20A

Black Enamel 5-Burner Cooktop
- Right Front: 18K BTU
- Left Front: 16K BTU
- Right Rear: 5K BTU
- Left Rear: 9.5K BTU
- Center (Oval): 10K BTU

Oven
- Capacity: 6.0 cu. ft.
- Convection Bake
- Convection Roast
- Bake
- Variable Broil: Low/High
- Air Fry
- Bread Proof
- Dehydrate

Warranty
One (1) Year Parts and Labor

Product Dimensions & Weight (WxHxD)
Oven Interior Dimensions:
24 13/16" x 21 5/8" x 19 5/8"

Outside Net Dimensions:
29 15/16" x 36 1/4-37" (Adjustable) x 28 11/16"

Weight: 208 lbs

Shipping Dimensions & Weight (WxHxD)
Dimensions:
33 1/16" x 41 3/4" x 30 5/16"

Weight: 234 lbs

Color	Model #	UPC Code
Fingerprint Resistant Stainless Steel	NX60T8511SS	887276409245
Fingerprint Resistant Black Stainless Steel	NX60T8511SG	887276409238
Fingerprint Resistant Tuscan Stainless Steel	NX60T8511ST	887276409252

ADA Compliant

ETL LISTED

Actual color may vary. Design, specifications, and color availability are subject to change without notice. Non-metric weights and measurements are approximate.

©2020 Samsung Electronics America, Inc. 85 Challenger Road, Ridgefield Park, NJ 07660. Tel: 800-SAMSUNG. samsung.com. Samsung is a registered trademark of Samsung Electronics Co. Ltd.